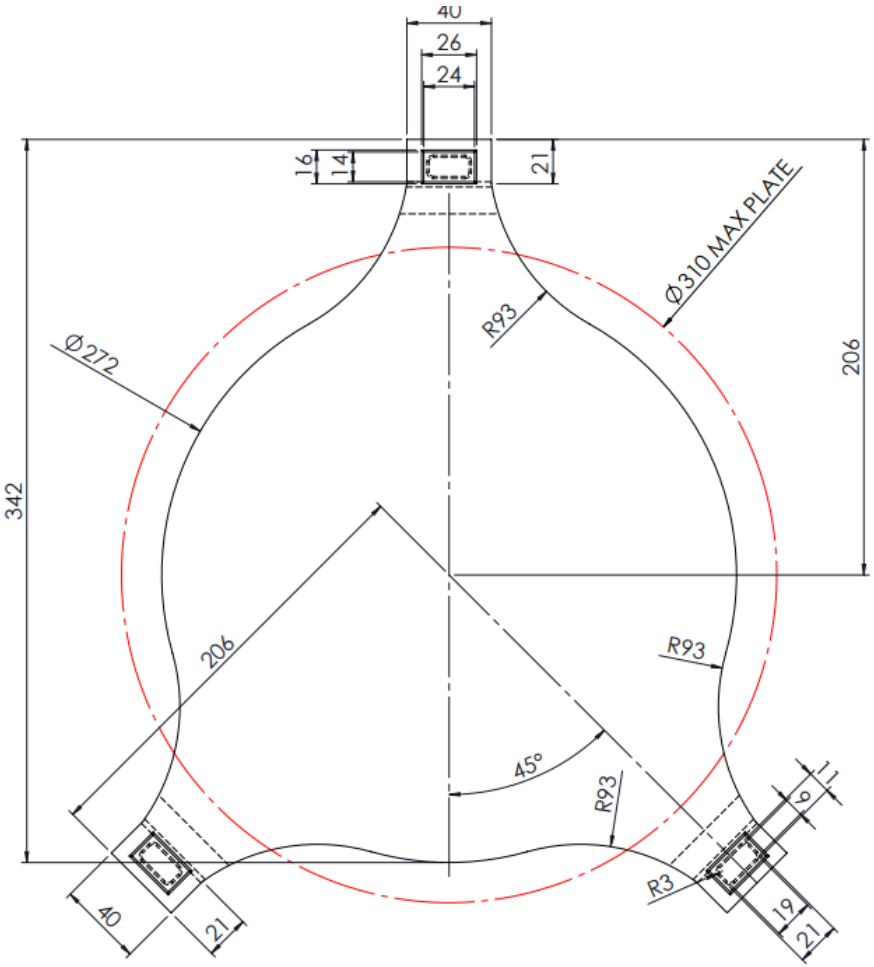
40
26
24
16
14
21
Ø310 MAX PLATE
R93
Ø272
206
342
206
R93
45°
R93
R3
11
9
19
21
40
21

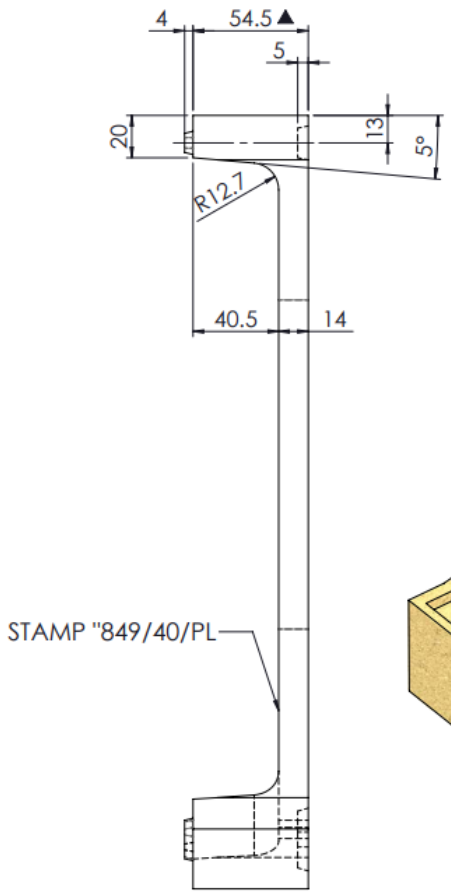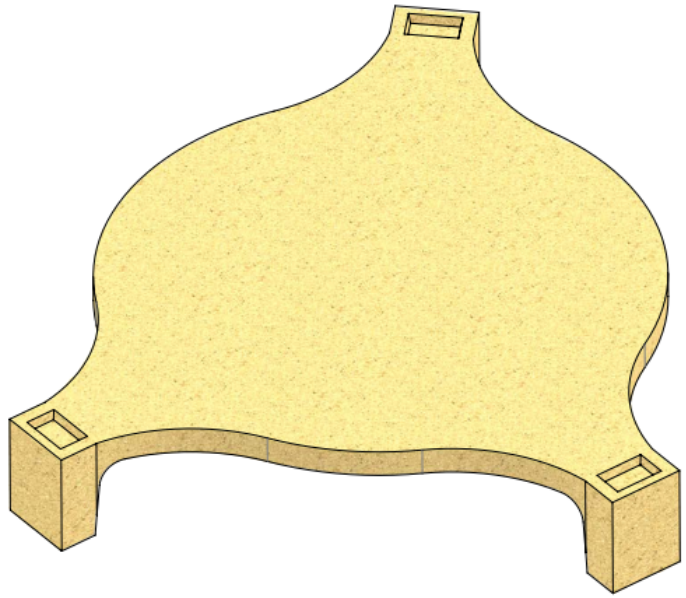
4
54.5
5
20
13
5°
R12.7
40.5
14
STAMP "849/40/PL